GCU 101 GENERATOR CONTROLLER

GCU101

Description:

GCU-101 is a 1-phase / 3-phase Automatic / Manual Generator controller module including protection for (STANDBY) GEN-SETS. It uses an advanced single chip micro-computer for an easy and trouble free GEN-SET control in case of mains power failures. If mains fail (over / under voltage, loss of mains voltage), GCU-101 initiates an automatic GEN-SET start cycle including load transfer to the generator by switching the generator contactors. After the mains is restored the load will be automatically transferred back to mains and the GEN-SET will stop after a cool down time. During all cycles, generator is fully protected against malfunction. All alarms occurring at abnormal GEN-SET conditions are computed and displayed either by LED or by the four-digit display and if necessary the GEN-SET gets stopped.

Values of over/under voltage, frequency and overload current (see parameter No.: 6,7,9,10,11) and timer settings for Preheat, cooling down time (see parameter No.: 5,14) etc. are programmable. The GCU-101 has 40 powerful programmable parameters to fit the program flow to customer needs.

FEATURES:

- Display of V-Hz-Hr of Generator and V of Mains.
- Display of load current.
- Display of the Battery Voltage, Charger Alternator Voltage.
- 40 programmable parameters.
- No external programming equipment needed.
- Current transformer ratio programmable.
- Electronic alternator excitation (WL point) circuit.
- 9 Digital inputs, 9 relay outputs.
- Relay outputs for mains and generator contactor.
- Automatic periodic start/stop test.
- Total Generator run hours counter.

Control & Fault inputs with front panel visual indication

- Low Battery Voltage
- Low Battery Voltage
- Low Oil Pressure
- High Temperature
- Fuel Level
- Over Load
- Over Speed
- Start Fail
- Alarm 1
- Alarm 2
- Mains
- Mains Contactor
- Generator
- Generator Contactor
- AUTO
- TEST
- Current
- Voltage
- Hz
- Hours
- Battery Voltage

SPECIFICATION:

- **SUPPLY**
  8 – 32 Volts reverse polarity protected.
- **CURRENT TRANSFORMER**
  5 Amp.
- **VAC INPUTS RATINGS**
  50 - 500 V @ 50Hz.
- **VAC MAXIMUM OVER VOLTAGE**
  600 V
- **SOLID STATE OUTPUT**
  500 mA
- **DIGITALINPUTS**
  2V Dcmax / Engine Ground
- **WEIGHT**
  800 gms
- **OPERATING TEMPRATURE**
  0 to 70 degree Cent.
- **DISPLAY ACCURACY**
  + / - 2% of F.S.D.
- **WARRANTY**
  1 Year.
- **Enclosure**
  BOX DIMENTION
  192 X 96 X60 mm
  CUT OUT DIMENTION
  186 X 91 mm

Note:-

GCU101 having two type of Versions GCU101 Version 3.3 & Version 0.4.
GCU101 Version 3.3 :- In Manual mode Contactor control (For Mains & DG) is operated by GCU101
GCU101 Version 0.4 :- In Manual mode Contactor control (For Mains & DG) is not operated by GCU101.

GCU101 Electrical Drawing for 1Ø

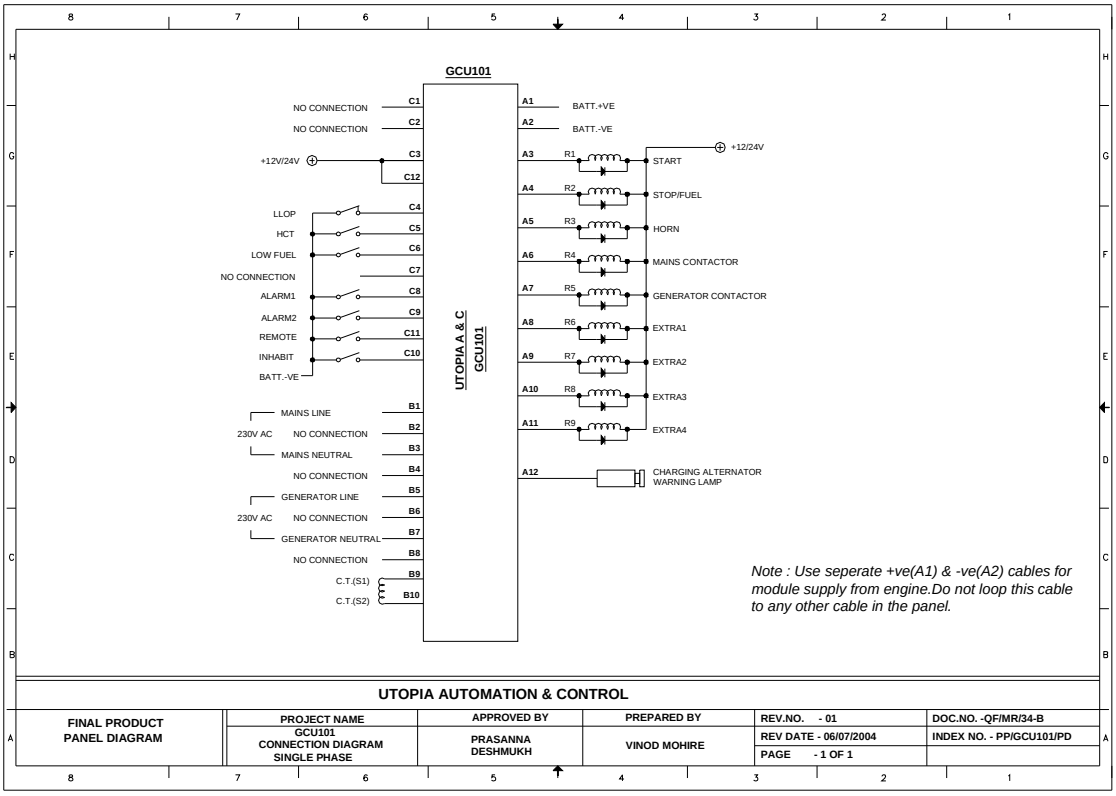

GCU101 Electrical Drawing for 3Ø

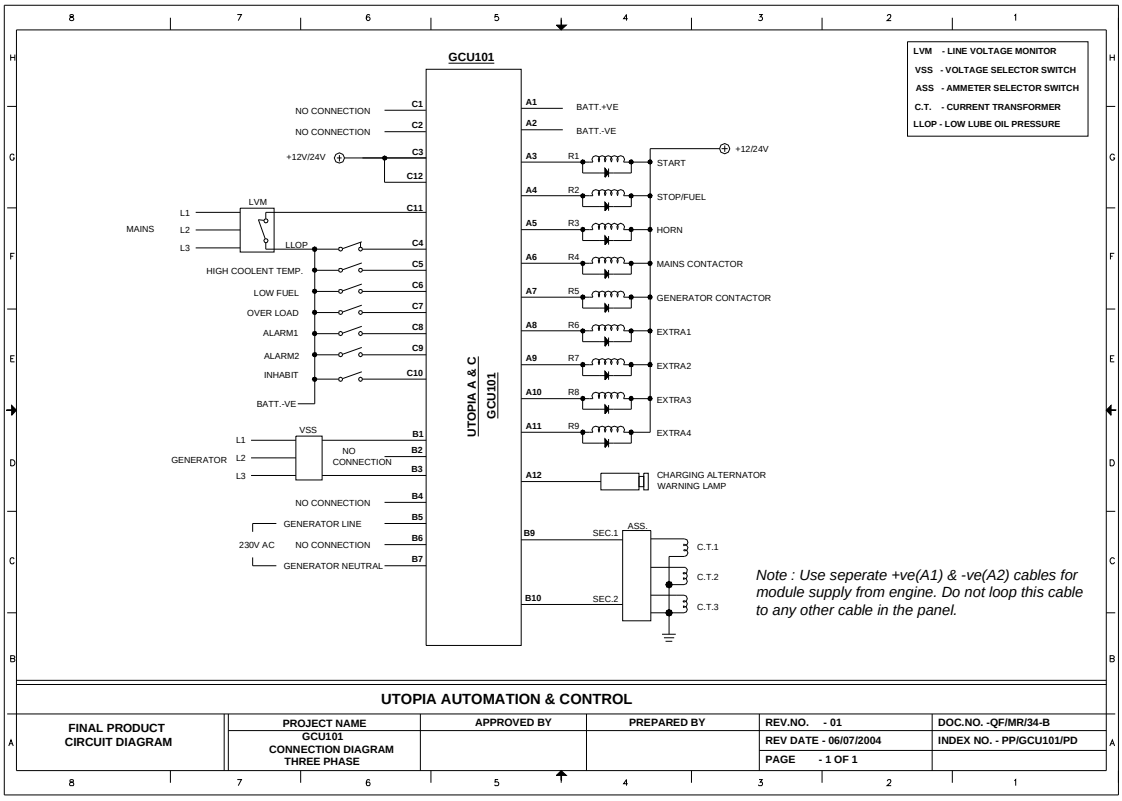

Utopia Automation & Control Pvt. Ltd.

P-4/5, Information Technology Park, MIDC, Satara – 415004.

Maharashtra. INDIA. Tele.Fax: +91- 21 62 – 24 68 21,24 68 29.

Website: www.utopiacontrol.com

ISO 9001 BUREAU VERITAS Certification

AN ISO 9001-2008 CERTIFIED COMPANY

All rights are reserved by UACPL; no part of this broacher should be changed in any form or by any means, Electronic, Including Photocopying for any purpose without prior consent in writing from UACPL.